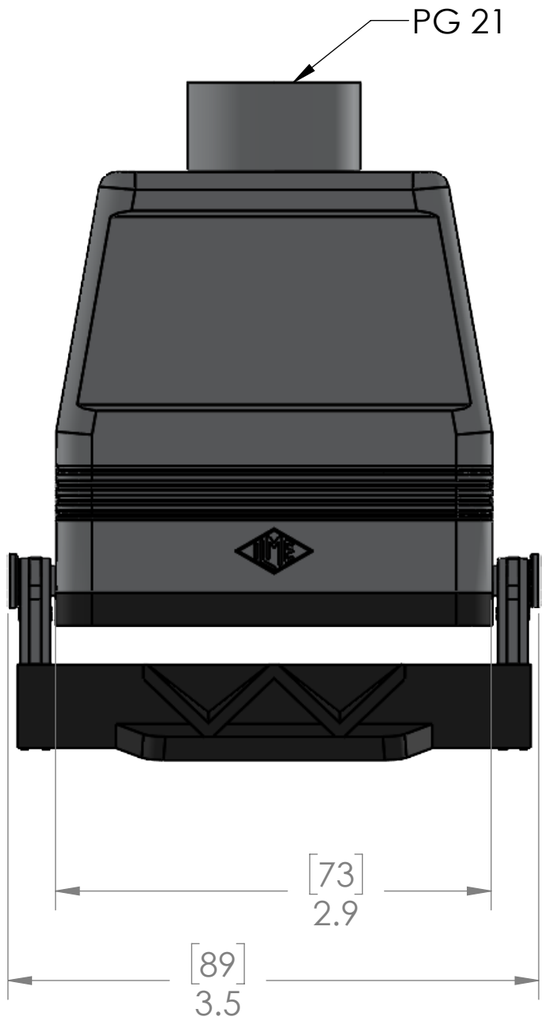

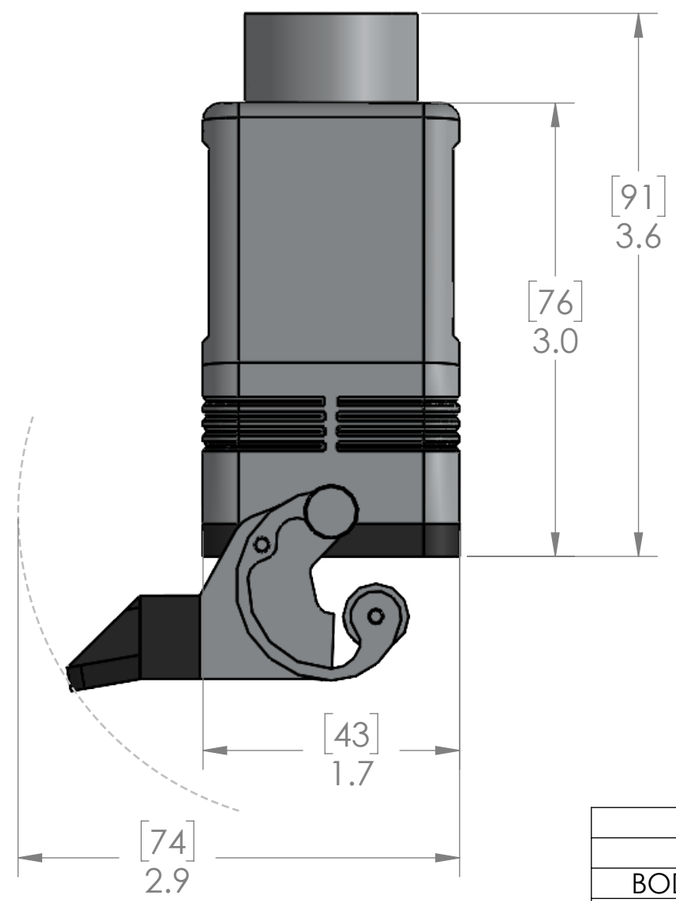

HOUSING MATERIALS	
BODY:	EPOXY COATED DIE CAST ALUMINUM
GASKET:	THERMOPLASTIC ELASTOMER
HANDLE:	POLYAMIDE
LEVERS:	STAINLESS STEEL
APPROVALS	
US	UL RECOGNIZED
CANADA	C-UL RECOGNIZED

SEAL RATING OF IP 65 ONLY ACHIEVED WHEN FULLY LATCHED TO MATING BASE USING A SEALING GLAND WITHOUT AN O-RING GASKET INSTALLED
SEAL RATING OF IP 66 ONLY ACHIEVED WHEN FULLY LATCHED TO MATING BASE USING A SEALING GLAND WITH AN O-RING INSTALLED

PROPRIETARY AND CONFIDENTIAL
THE INFORMATION CONTAINED IN THIS DRAWING IS THE SOLE PROPERTY OF MENCOM CORPORATION. ANY REPRODUCTION IN PART OR AS A WHOLE WITHOUT THE WRITTEN PERMISSION OF MENCOM CORPORATION IS PROHIBITED.

UNLESS OTHERWISE SPECIFIED:
DIMENSIONS ARE IN INCHES AND [MM]

MATERIAL
FINISH
DO NOT SCALE DRAWING

DRAWN BY	DCG
DRAWN DATE	12/17/2024
CHECKED BY	SL
CHECK DATE	12/17/2024

COMMENTS:

MENCOM CORPORATION

TITLE:
10 PL HC TE HD LVR&GSK PG21

SIZE	DWG. NO.	REV
B	CAV-10LG21	A
SCALE: 1:1	WEIGHT:	SHEET 1 OF 1