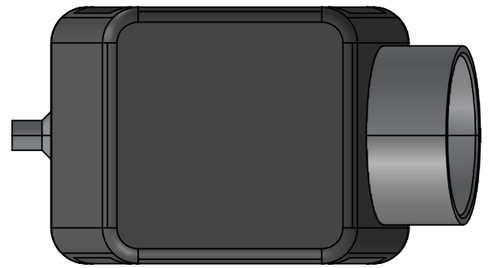

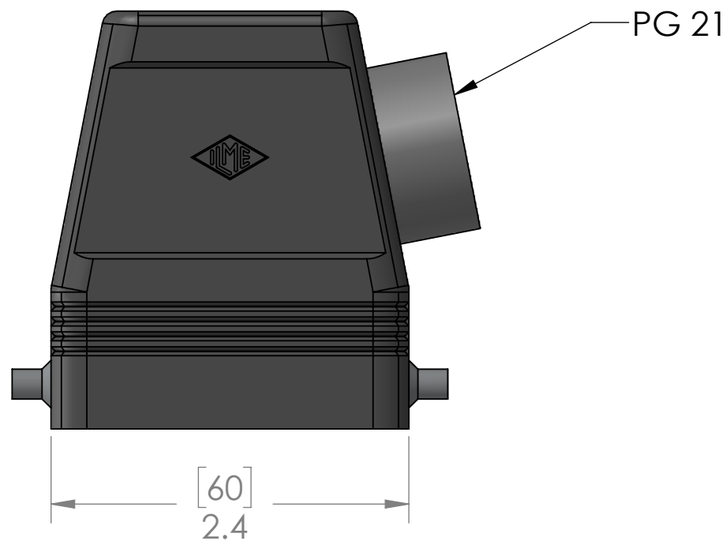

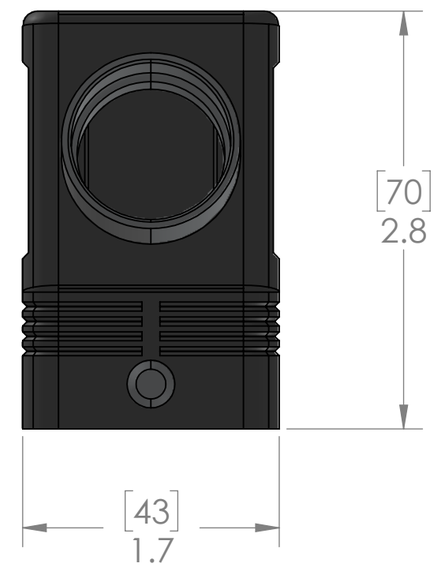

SEAL RATING OF IP IP66 (and IP69 DIN 40050 - 9)
ONLY ACHIEVED WHEN FULLY LATCHED TO
MATING BASE AND WITH AN
APPROPRIATE SEALING GLAND INSTALLED

APPROVALS / STANDARDS	
NEMA / UL	4/4X/12
	IP66 (and IP69 DIN 40050 - 9)

PROPRIETARY AND CONFIDENTIAL
THE INFORMATION CONTAINED IN THIS DRAWING IS THE SOLE PROPERTY OF MENCOM CORPORATION. ANY REPRODUCTION IN PART OR AS A WHOLE WITHOUT THE WRITTEN PERMISSION OF MENCOM CORPORATION IS PROHIBITED.

UNLESS OTHERWISE SPECIFIED:
DIMENSIONS ARE IN INCHES AND [MM]

MATERIAL

FINISH

DO NOT SCALE DRAWING

HOUSING MATERIALS	
BODY:	EPOXY COATED DIE CAST ALUMINUM

DRAWN BY	DCG
DRAWN DATE	08/30/2019
CHECKED BY	JJH
CHECK DATE	08/30/2019

COMMENTS:

MENCOM CORPORATION

TITLE:
6 PL HC SE HD; 2 PGS PG21;
AGR ENV

SIZE	DWG. NO.	REV
B	CAOW-06L21	A

SCALE: 1:1 | WEIGHT: | SHEET 1 OF 1